RXLG High-Power Rectangular Aluminum-Housed Wirewound Resistors

Technical Features

- Wide power range, compact size, high power, high vibration and shock resistance, and high stability
- Grooved aluminum alloy housing for effective heat dissipation
- Highly insulating, nonflammable potting filler provides mechanical stability and good thermal conductivity
- Main applications include wind power generation, power distribution, load testing and variable-frequency power supplies
- Install a heat sink as specified before use
- Resistance tolerance: ±5% (J) ~ ±10% (K)



Power Derating Curve

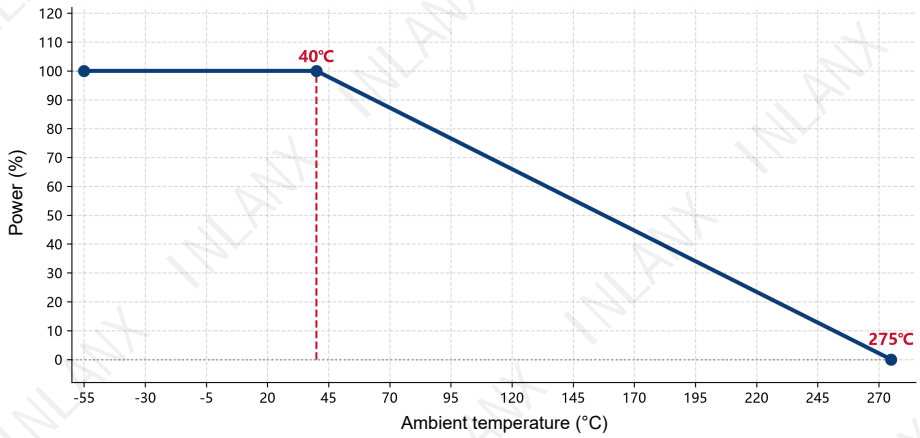

Full load: 100% rated power is supported at ambient temperatures of 40°C or below.

Derating point: Above 40°C ambient temperature, power decreases linearly with temperature.

Cutoff: Load power falls to zero at 275°C.

Note: Install the specified heat sink to ensure effective heat dissipation.

Dimensions (unit: mm)

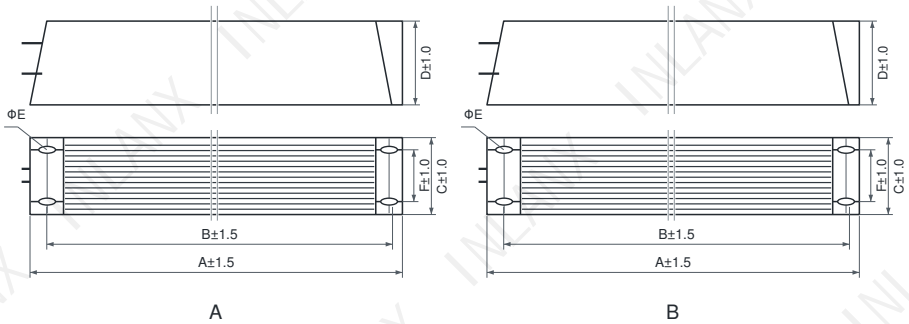

Type A: 60W-1500W standard version

Type B: 1000W-10000W high-power version

See the table on the next page for dimensions A~F for each power rating.

Dimensional Specifications

Model	Rated power (W)	Resistance range (Ω)	Withstand voltage (V)	Dimensions (mm)						Drawing
				A	B	C	D	E	F	
RXLG	60	1 ~ 1K	1000	115	98	40	20	5.5	/	A
RXLG	80	1 ~ 1K	1000	115	98	40	20	5.5	/	A
RXLG	100	1 ~ 1K	1000	165	148	40	20	5.5	/	A
RXLG		1 ~ 1K	1000	115	98	40	20	5.5	/	A
RXLG	120	1 ~ 1.2K	2000	190	171	40	20	5.5	/	A
RXLG	150	1 ~ 1.2K	2000	190	171	40	20	5.5	/	A
RXLG	200	1 ~ 1.5K	2000	165	147	60	30	5.5	/	A
RXLG	300	1 ~ 2K	3000	215	197	60	30	5.5	/	A
RXLG	400	1 ~ 2.4K	3000	265	247	60	30	5.5	/	A
RXLG	500	1 ~ 2.4K	3000	335	317	60	30	5.5	/	A
RXLG		1 ~ 2.4K	3000	265	247	60	30	5.5	/	B
RXLG	800	2 ~ 2.4K	3000	400	381	61	59	5.5	40.5	B
RXLG		1 ~ 2.4K	3000	335	317	60	30	5.5	/	A
RXLG	1000	2.2 ~ 3K	3000	400	380	50	107	5.5	30.5	B
RXLG		2.2 ~ 3K	3000	400	380	60	30	5.5	30.5	A
RXLG	1200	3 ~ 5.1K	3000	450	430	50	107	5.5	30.5	B
RXLG		3 ~ 5.1K	3000	420	400	60	30	5.5	30.5	A
RXLG	1500	3 ~ 5.1K	3000	485	465	50	107	5.5	30.5	B
RXLG		3 ~ 5.1K	3000	420	400	60	30	5.5	30.5	A
RXLG	2000	3 ~ 10K	3000	550	530	50	107	5.5	30.5	B
RXLG		3 ~ 5.1K	3000	450	430	50	107	5.5	30.5	A
RXLG	2500	3 ~ 10K	3000	600	580	50	107	5.5	30.5	B
RXLG		3 ~ 10K	3000	550	530	50	107	5.5	30.5	A
RXLG	3000	3 ~ 10K	3000	550	530	50	107	5.5	30.5	B
RXLG	4000	3 ~ 10K	3000	550	530	50	107	5.5	30.5	B
RXLG	4800-5000	3 ~ 10K	3000	550	530	50	107	5.5	30.5	B
RXLG		3 ~ 10K	3000	700	680	50	107	5.5	30.5	A
RXLG	6000	3 ~ 10K	3000	700	680	50	107	5.5	30.5	B
RXLG	7000	3 ~ 10K	3000	700	680	50	107	5.5	30.5	B
RXLG	8000	3 ~ 10K	3000	900	880	50	107	5.5	30.5	B
RXLG	9600-10000	3 ~ 10K	3000	900	880	50	107	5.5	30.5	B

Ordering Information

Ordering example: RXLG 1K J

Code	Description	Example
Series model	Product series	RXLG
Resistance	Resistance value	1K = 1kΩ，5R = 5Ω
Tolerance	Resistance tolerance	J = ±5%，K = ±10%

Tests and Performance Requirements

Test	Performance requirement	Test method
Terminal strength	No mechanical damage	40N，30s
Rapid temperature change	≤±(2%R+0.05Ω)	-55°C/30min ~ 125°C/30min, 5 cycles
Short-time overload	≤±(1%R+0.05Ω)	10 × PR, 5s
Damp heat, steady state	≤±(5%R+0.05Ω)	40±2℃，RH93±3%
Shock	≤±(1%R+0.05Ω)	50g, 11ms, 18 shocks
Vibration	≤±(1%R+0.05Ω)	10~1000Hz，0.75mm，200m/s²
Dielectric withstand voltage	No breakdown or flashover	AC，1min
Room-temp. endurance	≤±(5%R+0.05Ω)	40℃，PR，1000h